LEDWIDE
LEDWIDE LIGHTING CO.,LTD

Tel: 0086 755 29362351 Direct: 0086 0 18680360436
Fax: 86 755 29014058 E-mail: info@ledwide.com
www.ledwide.com
Address:1-2/F, Building A2,Sinopol Ind.Park, First Industrial Zone, BaiHua communities, Guangming New District, Shenzhen, P.R. China Postcode: 518107

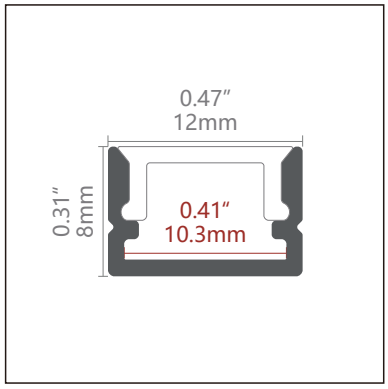

Aluminium LED Profile
LW-AS8-1

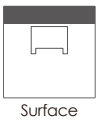

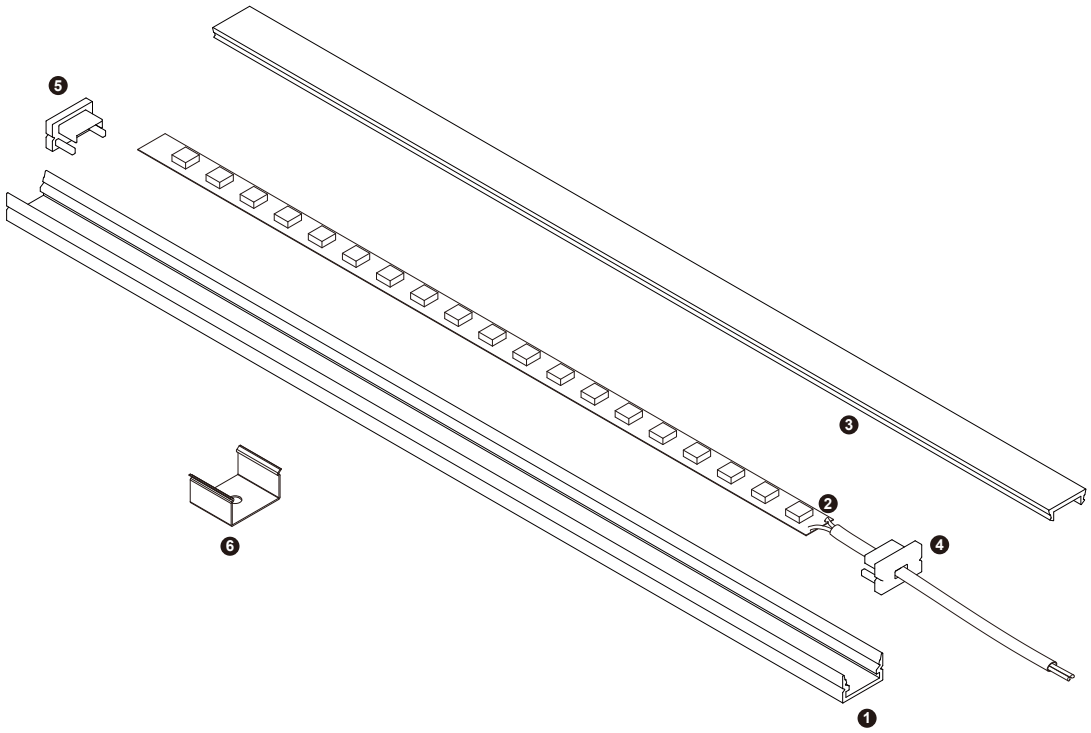

	Name	Code	Material	Color	Others
❶	Aluminum Profile	AS8-1	Aluminum	Silver / White / Black / RAL color	-
❷	LED strip	-	-	-	MAX. 14.4 W/m
❹	Endcap (with hole)	AS8-1-Cap-H	Plastic	Grey / White / Black	-
❺	Endcap (without hole)	AS8-1-Cap	Plastic	Grey / White / Black	-
❻	Metal Clip	AS8-1-Clip-M	Stainless Steel	ecru	-

❸ **Optional Diffuser(PMMA/PC)**

Color	Light Transmittance	Code
Opal	59%	AS8-1-O

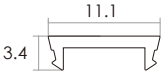

LEDWIDE
LEDWIDE LIGHTING CO.,LTD

Tel: 0086 755 29362351 Direct: 0086 0 18680360436
Fax: 86 755 29014058 E-mail: info@ledwide.com
www.ledwide.com
Address:1-2/F, Building A2,Sinopol Ind.Park, First Industrial Zone, BaiHua communities, Guangming New District, Shenzhen, P.R. China Postcode: 518107

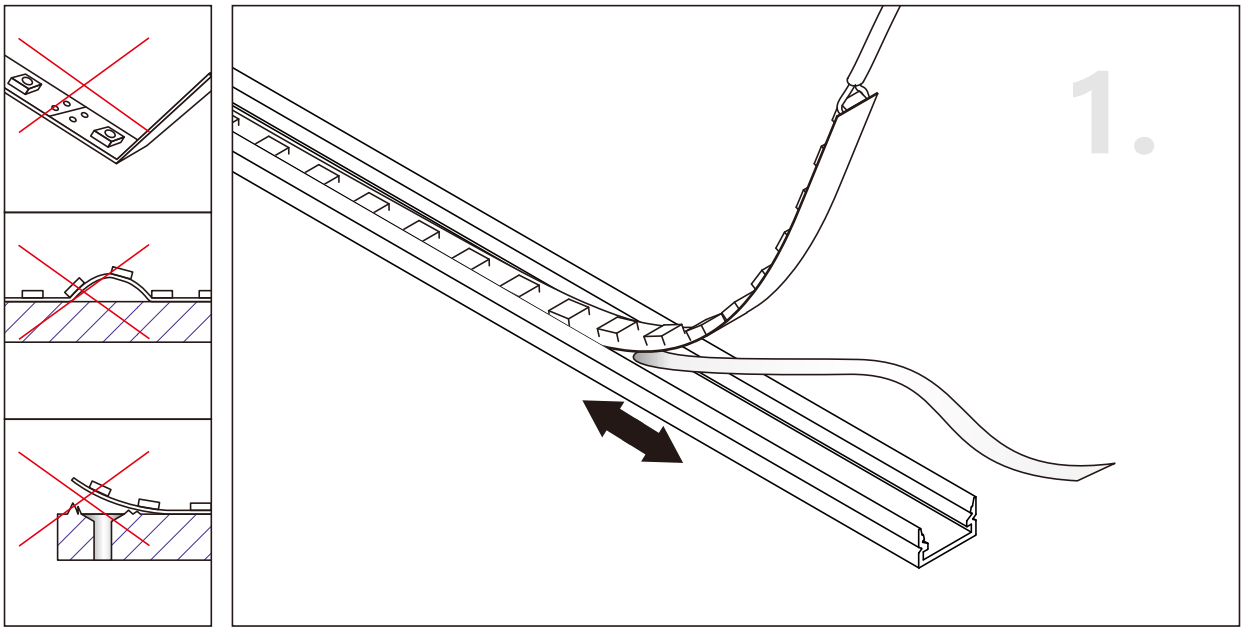

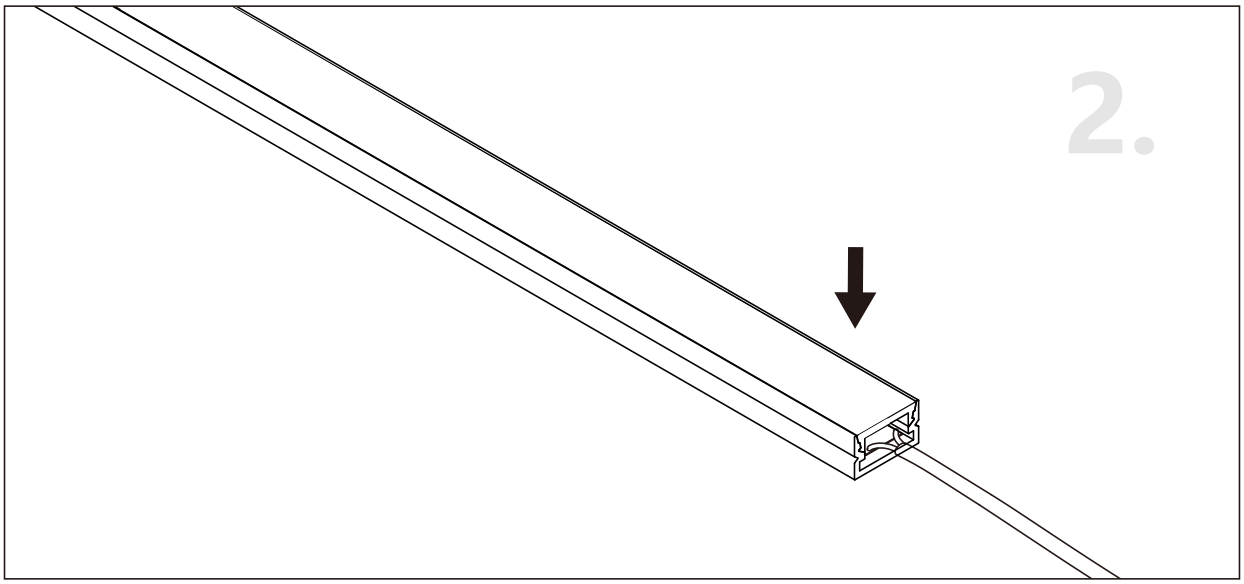

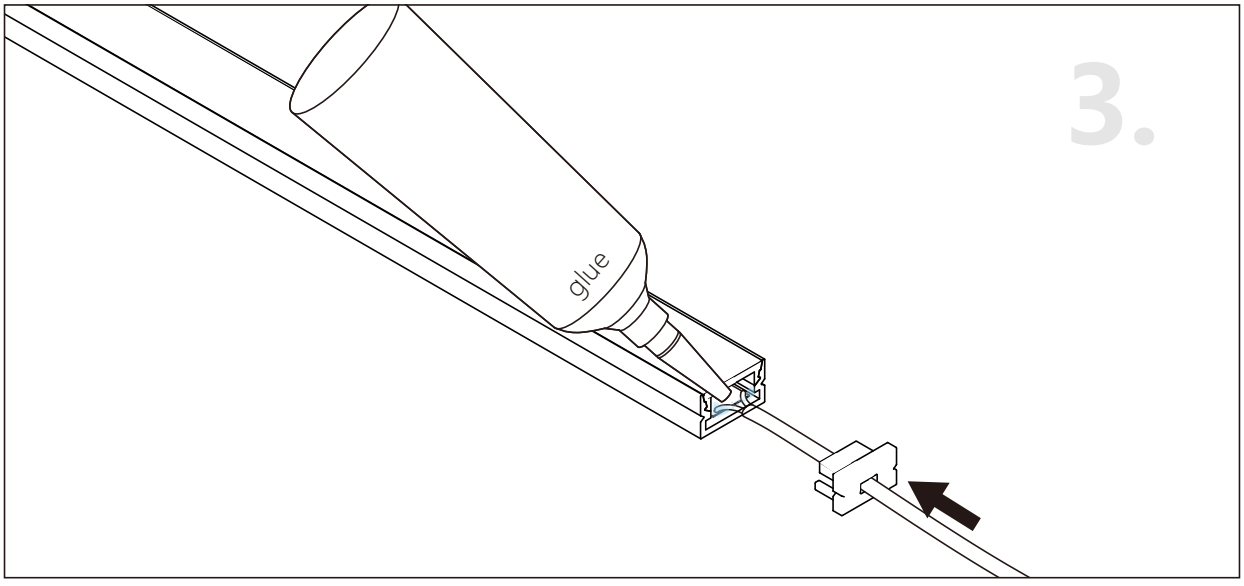

LEDWIDE
LEDWIDE LIGHTING CO.,LTD

Tel: 0086 755 29362351 Direct: 0086 0 18680360436
Fax: 86 755 29014058 E-mail: info@ledwide.com
www.ledwide.com
Address:1-2/F, Building A2,Sinopol Ind.Park, First Industrial Zone, BaiHua communities, Guangming New District, Shenzhen, P.R. China Postcode: 518107

Metal Clip / Plastic Clip Installation Instructions

Surface

